TT-FAR FULLY ADJUSTABLE FLOW CONTROL VALVE, PRESSURE COMPENSATED

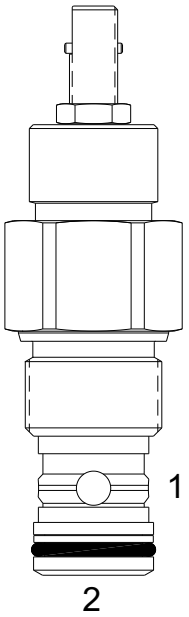

DESCRIPTION

12 size, 1 1/16 -12 thread, “Twelve” series, pressure compensated, flow control valve.

OPERATION

The TT-FAR maintains a constant flow rate out of (1) regardless of load pressure changes in the circuit downstream of (1).

The adjustable control orifice can be set to customer flow specification (see options for ranges).

The valve begins to respond to load changes when the flow through the valve creates a pressure differential across the control orifice. Consult chart to see regulation at high and low adjustment settings.

Reverse flow (1) to (2) returns through the control orifice and is non-compensated.

The regulated flow increases from low to high with counter-clockwise rotation of the adjustment screw.

FEATURES

- Hardened parts for long life.
- Industry common cavity.
- Fine low-torque adjustment.

Valve can adjust down to approximately 1 GPM. (Typical Leakage is 60 cu-in/min) when closed.

VALVE SPECIFICATIONS

Max Regulated Flow	18 GPM (68 LPM)
Rated Operating Pressure	3500 PSI (241 bar)
Viscosity Range	36 to 3000 SSU (3 to 647 cSt)
Filtration	ISO 18/16/13
Media Operating Temperature Range	-40° to 250° F (-40° to 120° C)
Weight	0.73 lbs. (0.33 kg)
Operating Fluid Media	General Purpose Hydraulic Fluid
Cartridge Torque Requirements	70 ft-lbs (95 Nm)
Cavity	TWELVE 2W
Cavity Form Tool (Finishing)	40500032
Seal Kit	21191300

HYDRAULIC SYMBOL

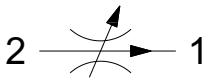

PERFORMANCE

Actual Test Data (Cartridge Only)

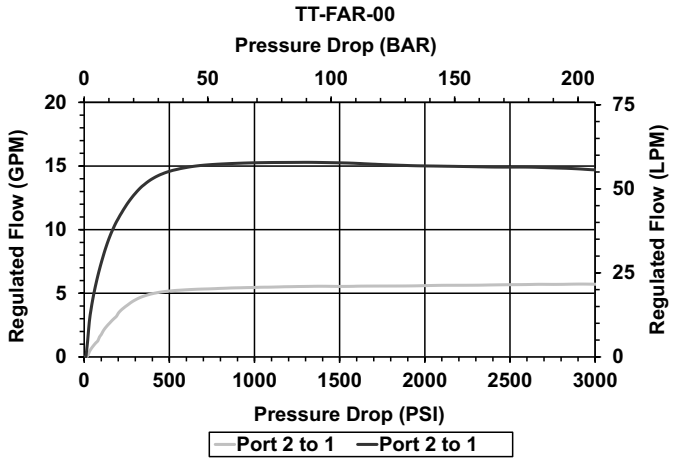

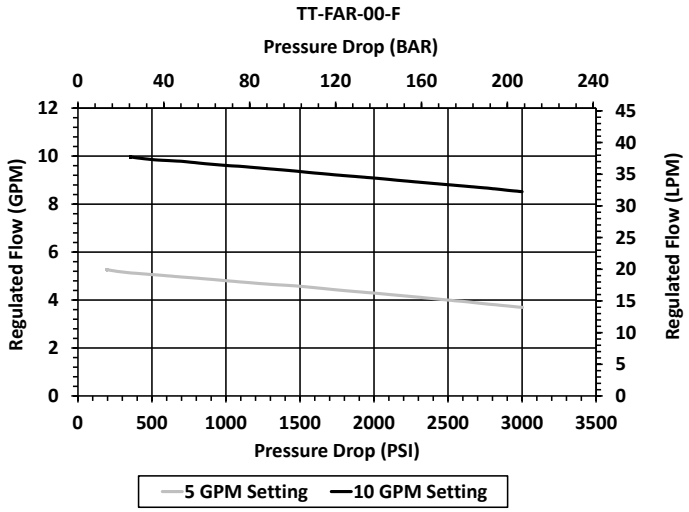

WARNING: *the specifications/application data shown in our catalogs and data sheets are intended only as a general guide for the product described (herein). Any specific application should not be undertaken without independent study, evaluation, and testing for suitability.*

Delta Power Company

4484 Boeing Drive Rockford, IL 61109 • USA • Phone +1 (815) 397-6628 • Fax +1 (815) 397-2526
mail: delta@delta-power.com • **www.delta-power.com**

DIMENSIONS

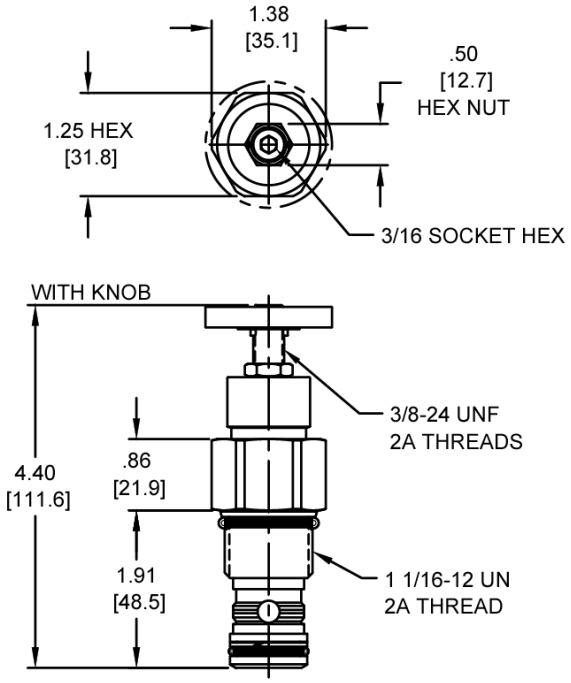

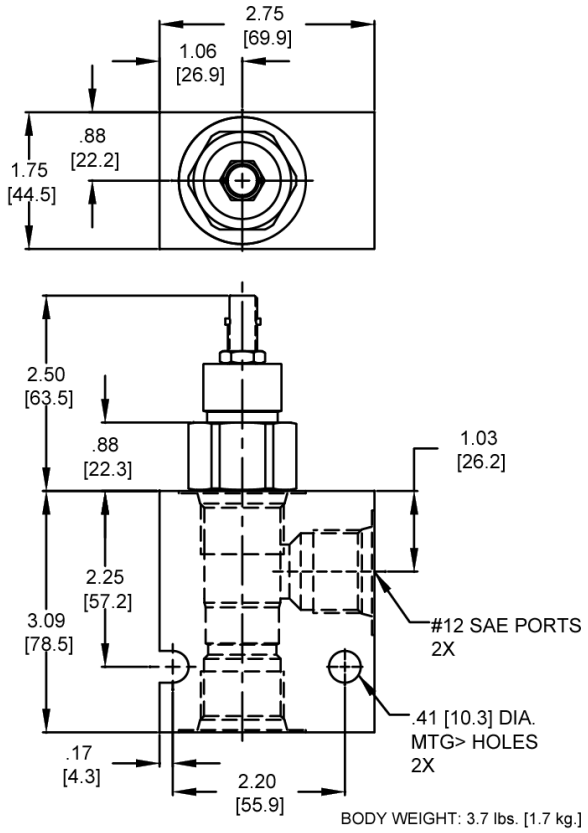

ORDERING INFORMATION

TT-FAR - _____ - _____ - _____ - _____

OPTIONS

Buna Standard	**00**
Viton Standard	**V0**
Buna, Knob	**0K**
Viton, Knob	**VK**

FLOW SETTING
0-18 GPM
Preset
Example: 0015 = 15 GPM +/- 10%

STD. FLOW RANGES

BLANK	0 – 18 GPM - Full flow range
F	0 – 9 GPM - Fine adjust low flow range

BODIES

Blank	Without Body
S	#12 SAE Ports

WARNING: *the specifications/application data shown in our catalogs and data sheets are intended only as a general guide for the product described (herein). Any specific application should not be undertaken without independent study, evaluation, and testing for suitability.*

Delta Power Company

4484 Boeing Drive Rockford, IL 61109 • USA • Phone +1 (815) 397-6628 • Fax +1 (815) 397-2526
mail: delta@delta-power.com • **www.delta-power.com**